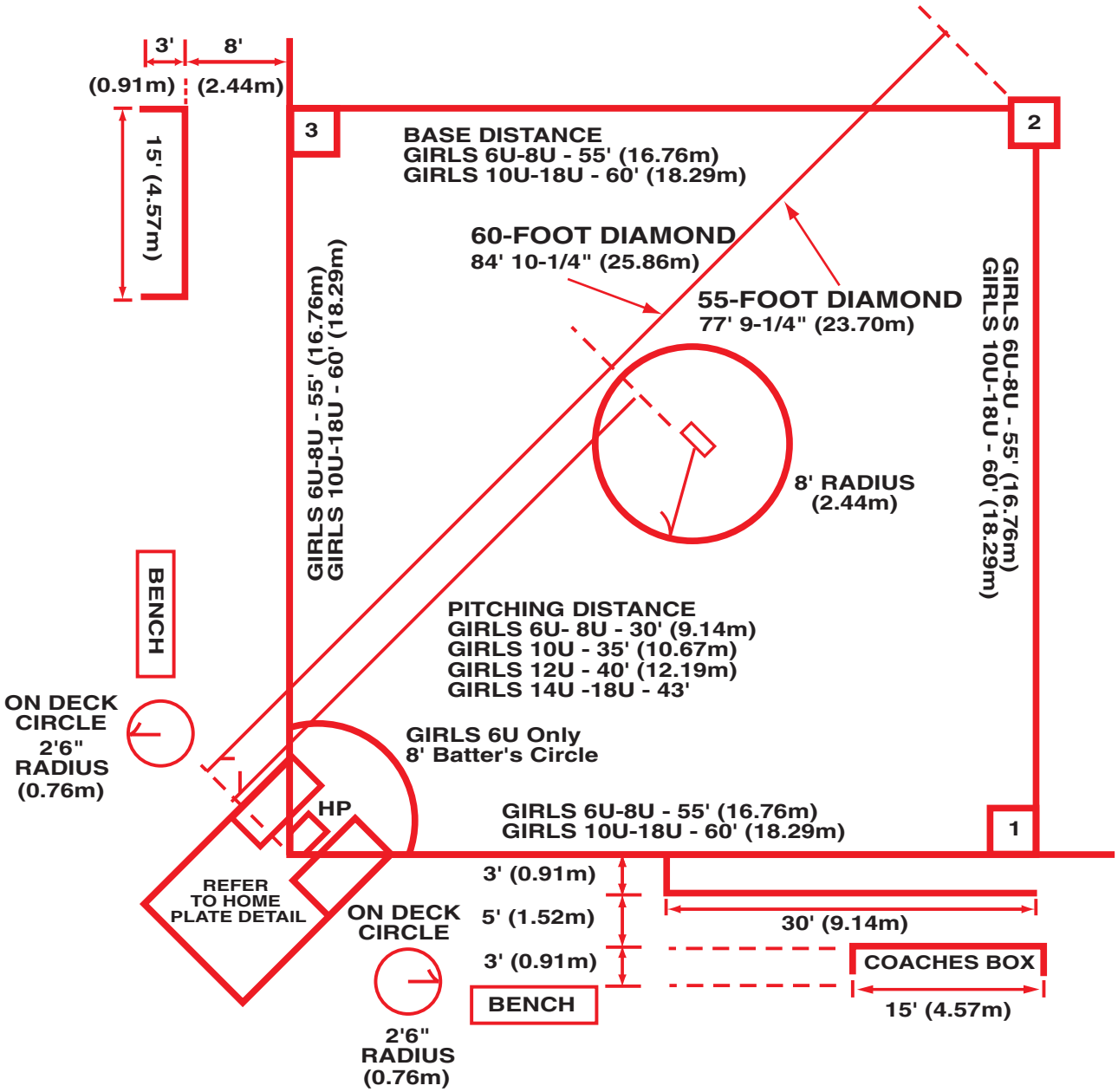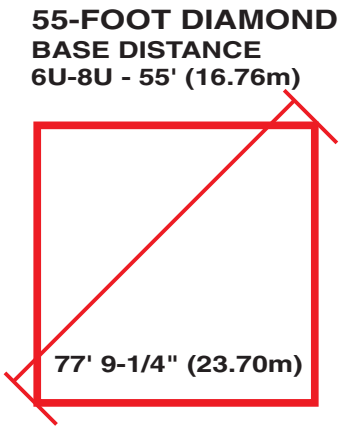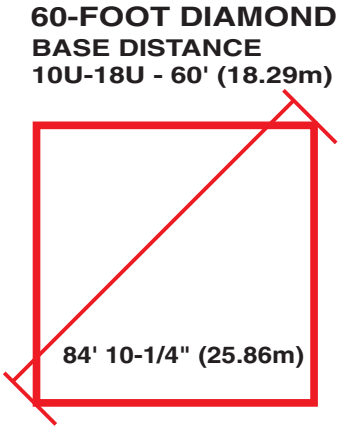South Huntington Beach Girls Fastpitch Softball
Field Setup Guide (updated 2014)